VTSB60326L

Acrylic Anti-Skid Shower Base With Left Drain Hole

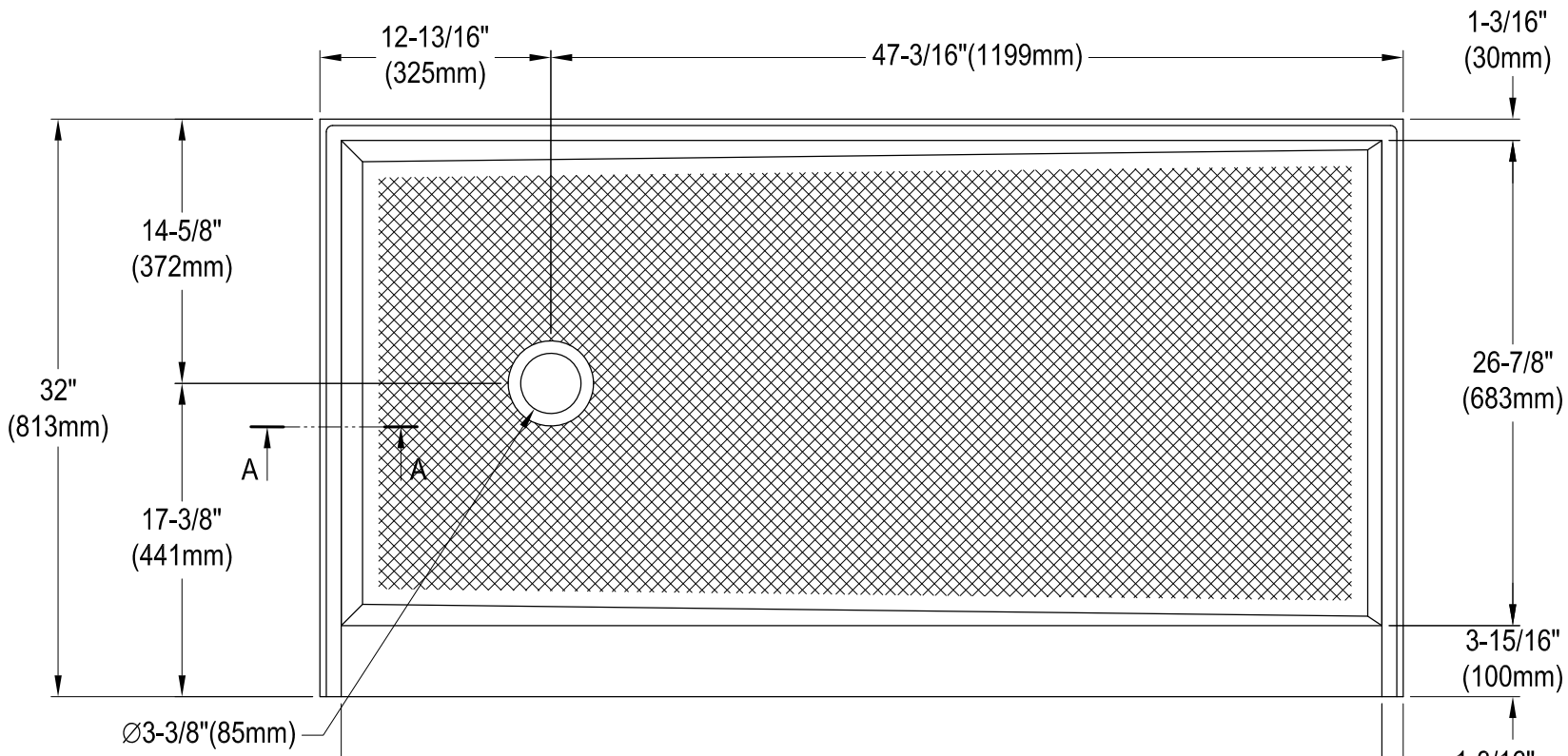

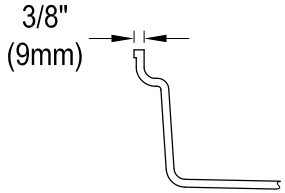

Section A-A
(Scale 1.5:1)

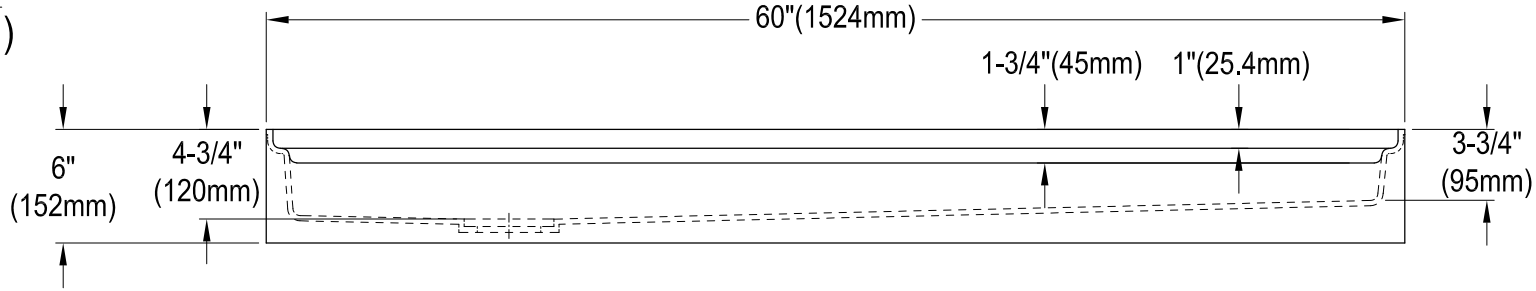

Ref# VTSB60326L | 2020-09-A